SSI5 SSI5-2 SSI5R SSI5R-2
Orbital Shaking Incubator
Operational Manual

Models:
SSI5 SSI5-2
SSI5R SSI5R-2
Previously designated as
SI6 SI6-2
SI6R SI6R-2
4861534
Revised: December 12, 2017

Table of Contents

Using the Unit Safely 4
Introduction 4
General Safety Considerations....4
Precautions for Your Unit 4
Meanings of Symbols 5
About this Manual....5
Features of Your Unit 6
Product description....6
Key Features....6
Receiving Your Unit 7
Unpacking and Inspecting Your Unit 7
Inspection Guidelines 7
Recording Data Plate Information 7
Installing the Unit 8
Installation Overview 8
Selecting a Location for the Unit....8
Leveling the Unit....8
Sterilizing Your Unit....8
Installing Sample Tray....9
Plugging the Unit into a Power Source....9
Operating the Unit 10
Control Panel Overview....10
Getting the Unit Ready for Use....10
Turning the Unit On 10
Setting the Chamber Temperature 11
Calibrating the Main Temperature Control 11
Setting the Shaker Speed 11
Using the Timer 12
Setting the Safety Temperature Alarm 12
Adding or Removing Counterweights 12
Adjusting the Shaker Movement....13
Interior Accessory Outlet 14
Maintaining the Unit 15
Disinfecting Your Unit....15
A Typical Decontamination Procedure 15
Control Maintenance 15
Troubleshooting 16
Solving Problems 16
Temperature....16
Refrigeration (SI6R models only) 18
Power 18
Mechanical 19
Contamination 19
Getting Your Unit Serviced 20

Table of Contents

Getting Assistance 20
Obtaining Nameplate Information 20
Returning Your Unit 20
SHEL LAB Contact Information 20
Replacement Parts and Accessories 21
Replacement Parts 21
Specifications 22

These units are TUV CUE listed as orbital shaking incubators for professional, industrial, or educational use where the preparation or testing of materials is done at approximately atmospheric pressure and no flammable, volatile, or combustible materials are being heated.

These units have been tested to the following requirements:

CAN/CSA C22.2 No. 61010-1:2012
CAN/CSA C22.2 No. 61010-2-010 + R:2009
UL 61010-1:2004 + R:2005-07 + R:2008-10
UL 61010A-2-010:2002
UL 61010-1:2012
EN 61010-1:2010
EN 61010-2-010:2003

Using the Unit Safely

Introduction

Thank you for choosing a SHEL LAB shaking orbital incubator. SHEL LAB sets the standard for quality and reliability. Your unit is backed by over 30 years of design and manufacturing excellence in the scientific, research, and medical equipment industries.

Your unit is a general-purpose incubator designed for professional, industrial or educational use where

- the preparation or testing of materials is done at approximately atmospheric pressure, and
- no flammable, volatile or combustible materials are being heated.

These units are not intended for use at hazardous or household locations.

Before you use the unit, read this entire manual carefully to understand how to install, operate, and maintain the unit in a safe manner. Your satisfaction with the unit will be maximized as you read about its safety and operational features. Keep this manual on-hand so it can be used by all operators of the unit. Be sure all operators of the unit are given appropriate training before you put the unit in service.

Use the unit only in the way described in this manual. Failure to follow the guidelines and instructions in this manual may be dangerous and illegal.

General Safety Considerations

Your incubator and its recommended accessories have been designed and tested to meet strict safety requirements.

For continued safe operation of your incubator, always follow basic safety precautions including:

- Read this entire manual before using the incubator.
- Be sure you follow any city, county, or other ordinances in your area regarding the use of this unit.
- Use only approved accessories. Do not modify system components. Any alterations or modifications to your incubator may be dangerous and will void your warranty.
- Always plug the unit's power cord into a grounded electrical outlet that conforms to national and local electrical codes. If the unit is not grounded, parts such as knobs and controls may conduct electricity and cause serious injury.
- Do not connect the unit to a power source of any other voltage or frequency beyond the range stated on the power rating overlay at the rear of the unit.
- Do not modify the power cord provided with the unit. If the plug does not fit an outlet, have a proper outlet installed by a qualified electrician.
- Avoid damaging the power cord. Do not bend it excessively, step on it, place heavy objects on it. A damaged cord can easily become a shock or fire hazard. Never use a power cord after it has become damaged.

Precautions for Your Unit

Observe the following additional safety guidelines for your unit.

- **Operating Conditions** For optimum performance, use your incubator at room temperatures between 18 and 25°C, at no greater than 80% relative humidity (at 25°C). If you intend to operate the unit in conditions outside of these limits, contact customer service.
- **Installing the Unit** Installation of the unit can be performed by the end user
- **Lifting and Handling** The incubator is heavy and should be moved by a lifting device, such as pallet jack. If you must lift the device by hand, always observe the following guidelines:
    - Do not move the incubator while it is plugged into the power source.
    - Remove all moving parts, such as shelves and trays, before you move the unit. Make sure the door is securely shut.
    - Use at least four people to lift the incubator.
    - Lift the unit from its bottom surface only.
    - Do not use doors, handles or knobs to lift or stabilize the unit.
    - Keep the unit from tipping.
- **Servicing Your Unit** Only qualified personnel should service your unit. Faulty service may be dangerous and will invalidate the unit's warranty. Do not operate the unit if any parts are damaged or missing.
- **Maintenance** Unplug the unit from its power source before attempting any maintenance.

Meanings of Symbols

In this manual and on labels attached to the product, graphic symbols have the following meanings:

Symbol	Indcation
	You should consult this manual for a description or discussion of a control or item
	Temperature
	Over Temperature Safety
°C	Degrees Centigrade
	AC Power
	Manual Adjustable Components
	Oscillator
	Timer
	Light
	Indicates "**Unit should be recycled"** (Not disposed of in land-fill)

About this Manual

Throughout this manual, the words WARNING and CAUTION have the following meanings:

WARNING

A potentially hazardous situation that, if not avoided, could result in serious injury or death.

CAUTION

A potentially hazardous situation that, if not avoided, may result in minor or moderate injury or damage to the equipment.

Features of Your Unit

Product description

Your shaking orbital incubator provides:

- **Controlled environment** For continuous growth of biological organisms.
- **Vibration-free operation** A unique adjustable counterbalance system provides vibration-free operation regardless of load.
- **Large chamber** A large six cubic foot chamber facilitates throughput. Shelves in the top provide space for static incubation during shaking sessions.
- **Refrigeration** The SSI5R and SSI5R-2 (SI6R SI6R-2) are refrigerated, which supports insect cell culture and entomology studies.
- **Load Flexibility** Our unique counterbalance weighting system is adjustable to accommodate off-center loads, varying capacities and stroke lengths, which in turn allows smoother running.
- **Oxygen transfer** An adjustable orbit provides maximum oxygen transfer and offers three circular/stroke sizes, from vigorous to gentle, to accommodate different types of cells.
- **Sample protection** All major functions—temperature, RPM, and time—have audio and visual alarms that immediately alert you to deviations from set parameters.
- **Over-temperature protection** Provided by a safety thermostat that is independent of the main temperature controller. Guards your samples from inadvertent overheating.

Key Features

- A brushless DC motor offers quiet and maintenance-free orbital shaking motion.
- A PID microprocessor controller provides precise uniformity.
- The rotation platform is included with each unit and is self-centering for easy installation.
- Large LED displays are easy to read.
- Digital keypad operation allows calibration of the main temperature controller to a reference thermometer.
- A fluorescent light allows you to see all that's going on.
- An interior electrical outlet and a one-inch hermetically sealed, double-paned glass viewing window.
- Unit exteriors are formed of cold-rolled steel finished with corrosion resistant powder coat paint.
- Chamber interiors and shelves are made of polished stainless steel, which provides excellent durability and an easy-to-clean surface.
- An interlock switch stops the shaking mechanism if the door is opened.
- The SSI5R and SSI5R-2 (SI6R SI6R-2) refrigerate using a 1/6-horsepower motorized compressor that does not use CFCs or HCFC's.

Receiving Your Unit

Unpacking and Inspecting Your Unit

Before leaving our factory, all units are packaged in high quality shipping materials designed to provide protection from transportation related damage.

Once a unit leaves our factory, however, safe delivery becomes the responsibility of the carrier who is liable for loss or damage to your unit. Damage sustained during transit is not covered under your unit warranty.

When you receive your unit, inspect it for concealed loss or damage to its interior and exterior. Should you find any damage to the unit, follow the carrier's procedure for claiming damage or loss.

Inspection Guidelines

- Carefully inspect the package for damage. If the package is damaged, report the damage to the carrier service that delivered the unit.
- If the carton is not damaged, open the crate and remove its contents. Verify that all of the following equipment is included with the unit:
    - 1 shelf 5100531
    - 1 sample tray 9750758
    - 4 shelf clips 1250512
    - 6 counter weights (some of which are located in the metal pocket at the back of the unit)
    - 4 leveling feet
- Carefully check all packaging before discarding.

Save the unit's shipping crate until you are sure all is well. If you need to return your unit for any reason, see "Getting Your Unit Serviced" on page 20.

Recording Data Plate Information

Once you have determined the unit is free from damage, locate the data plate at the back of the unit.
The data plate indicates your unit's model number and serial number. Record this information on the space provided on page 20, "Getting Your Unit Serviced" for easy future reference.

Installing the Unit

Installation Overview

To install your unit, you need to:

1. Select a suitable operating location for the unit.
2. Level the unit.
3. Sterilize the unit.
4. Install the sample tray.
5. Plug the unit into a power source.

Selecting a Location for the Unit

The operating location of your unit has a significant impact on your unit's performance and how often it must be cleaned and disinfected. Use the following guidelines to select the best location for your unit.

CAUTION

DO NOT MOUNT YOU UNIT TO A FLAMMABLE SURFACE.

- **Operating Conditions** For optimum performance, use your incubator at room temperatures between 18 to 25°C (65 to 77 °F) and at no greater than 80% relative humidity (at 25°C).

  If you intend to operate the unit in conditions outside of these limits, contact your customer service representative.

- **Exposure** Avoid exposing the unit to the following:
  - Direct sun
  - High air movement, such as air vents, heating and cooling ducts, doors and other heavy traffic areas.
  - Extreme heat from steam radiators, stoves, ovens, autoclaves, or other sources of heat.
- **Level Surface** The unit must be located on a solid, flat and level surface.
- **Space requirements** Allow a minimum of 20 cm (8 in.) between the rear and sides of the unit, and any walls or partitions that can obstruct free airflow. Allow enough room so that the door can swing open at least 90 degrees. **Do not block access to the power cord, circuit breaker or fuses.**
- **Cleanliness** Good laboratory quality control practice is the most efficient and reliable way to keep your unit free from contamination.

  If it is important that the interior of your unit remain sterile, always pay attention to the following guidelines:
  - Keep the air in the laboratory as clean as possible.
  - Keep the floor around the unit clean.
  - If the unit must be placed at the floor level, use a platform, such as a caster platform. This facilitates movement of the unit during cleaning and allows for easier access to the back of the unit.
  - Minimize the number of times access is made to the chamber during normal operation. Each time the door is opened, room air is drawn in and can lead to contamination of the unit.

After deciding on the location for your unit, follow the installation instructions below.

Leveling the Unit

The unit must sit level from side to side and from front to back. While the unit does not have to be absolutely level, each of the four feet should be in firm contact with the surface on which the incubator is to be run.

Install the four leveling feet in the four holes in the bottom of the unit. When the feet are installed, you can raise or lower a corner of the unit by turning its foot clockwise or counterclockwise, respectively.

To level the incubator

1. Insert a leveling foot into each of the four holes at the bottom of the unit.
2. Adjust the foot at each corner until the unit stands level and solid without rocking.

If you move the incubator to a different location, be sure to re-level the incubator at the new location.

Sterilizing Your Unit

The interior of your incubator was cleaned at the factory but is not sterile. For information on

sterilizing your unit, see “Disinfecting Your Unit“ on page 14.

Installing Sample Tray

Your unit comes with a sample tray as standard equipment.

To install the sample tray

1. Enclose all corners of the shaking mechanism within the lips of the sample tray. This can be done easily by positioning the front two corners and then setting the rest of the tray down.
2. Shake the tray by its handles to confirm that it is firmly in place.

Plugging the Unit into a Power Source

We recommend that you plug your incubator into a circuit separate from other equipment. This prevents damage or destruction of the incubator caused by overloading or failure of other equipment on the same circuit.

The electrical supply circuit to the incubator must conform to all national and local electrical codes. The voltage supplied to your unit should not vary more than 10%.

WARNING

For your own safety, do not plug the unit into a power source until you have read and understood the safety and operational instructions in this manual.

To connect the unit to a power source

1. Be sure the plug and the cord are in good condition. If the power cord is worn, cut or damaged in any way, do not use it. Contact customer service for a replacement power cord. For information on contacting customer service, see page 20.
2. Plug the service cord firmly into a grounded electrical outlet. If the plug does not fit the outlet, have a proper outlet installed by a qualified electrician.

Operating the Unit

Control Panel Overview

Before turning the incubator on for the first time, take a moment to familiarize yourself with its controls and features. Following is an overview of the control panel.

1. Main temperature control
   - Displays current chamber temperature.
   - Controls temperature set point and calibration.
2. Shaker Speed (RPM) Control
   - Displays shaker platform speed.
   - Controls the rotational speed (RPM) of the shaker mechanism.
3. Oscillation timer
   - Permits timed shaking at a preset RPM.
4. Over Temperature Protection
   - Provides backup protection for the main temperature control.
   - Keeps the chamber temperature from inadvertently rising above the set point.
5. Alarms
   - Error status lights and an audible alarm immediately alerts you to deviations of temperature, RPM, or time.
6. RPM Switch
   - Activates and deactivates the shaker platform.
7. Light Switch
   - Controls the fluorescent light inside the chamber.
8. Timer Switch
   - Activates and deactivates the timer.
9. Power Switch
   - Controls all power to the unit. The switch is lit by a green light when the power is on.

Getting the Unit Ready for Use

WARNING

This equipment is NOT intended for the processing of Flammable materials.

Use the following guidelines to prepare the unit for regular use. The guidelines illustrate how to use all the features of your incubator. Your laboratory protocol will determine your actual use of these features.

1. Turn the unit on.
   See "Turning the Unit On" below on this page.
2. Set the chamber to the desired temperature and wait for the chamber temperature to stabilize.
   See "Setting the Chamber Temperature" on page 11.
3. Calibrate the main temperature control.

At any time, use the following features when appropriate.

- Turn the shaking mechanism on and adjust the speed of the shaking mechanism.
  See on page 11.
- Set the Over Temperature Protection (OTP) to guard your samples from inadvertent over-heating.
  See on page 12.
- To account for the weight of different sample loads, you will need to adjust the number of counterweights being used.
  See on page 12.
- To adjust the movement of the shaking mechanism from vigorous to gentle, you will need to adjust the shaking stroke and counterweight position.
  See on page 13.

Turning the Unit On

The unit is equipped with an On/OFF switch that controls power to the entire unit. The switch is lit by a green light when the power is on.

To turn the unit on

1. Be sure the unit is plugged in.
2. Push the *Power* switch to the On (I) position.

3. When you turn the unit on for the first time, use a screwdriver or coin to turn the *Safety Temp* knob fully clockwise to its maximum position. This deactivates the Over-Temperature Protection (OTP) feature. For more information on the OTP, see on page 12.

Setting the Chamber Temperature

You raise or lower the temperature in the chamber using the main temperature controller, which consists of a digital display and UP and DOWN arrow pads marked *Set Temp*.

To set the chamber temperature

- To set temperature, press and release either up or down key and display will blink. Then, press and hold either up or down key to scroll up or down for set point.

  When you press either the Up or Down arrow key, the display starts to blink from bright to dim and shows the temperature set point, which is the temperature to which the unit will stabilize.

  The incubator accepts the new set point after you release the arrow pads for 5 seconds. At that time, the display stops blinking and indicates the present chamber temperature.

After setting the chamber temperature, wait at least 1 hour for the chamber temperature to stabilize to ambient conditions. To achieve maximum temperature stability, wait 24 hours before you begin using the unit.

Calibrating the Main Temperature Control

Calibrating your unit ensures that the temperature inside the incubator matches the temperature reading of a certified reference thermometer.

We recommend that you calibrate your unit once it has been installed in its working environment and the chamber temperature has been stable at the set point for several hours.

You should calibrate your unit at or as close to the temperature set point as possible. To maximize your results, calibrate the unit each time you operate the unit at a new temperature.

Use only a Certified (NIST) temperature-measuring device to calibrate your unit.

To verify that your unit needs calibration

1. Be sure the temperature within the chamber has stabilized at the set point for several hours.
2. Insert a certified reference thermometer through the access porthole. To attain the best calibration, place the thermometer as close to the location of the samples. Be sure the thermometer is not touching any shelving.
3. Allow the reference thermometer to stabilize until it displays a constant value for one hour.
4. Compare the temperatures displayed by the incubator and reference thermometer.

If they match, you do not need to calibrate your unit for that temperature. If they do not match, you need to calibrate your unit.

To calibrate your unit

1. Simultaneously press and hold the *Set Temp* Up and Down arrow keys.

After approximately 5 seconds, the temperature reading will blink off and on. Release the Up and Down arrow key.

2. While the display is blinking, press the Up or Down arrow keys to select the temperature that matches your reference thermometer. When you hold an arrow key, the display scrolls through the temperature settings.

The incubator accepts the new temperature reading after you release the arrow pads for 5 seconds. At that time, the display stops blinking.

3. For best results, re-verify the calibration after the unit has remained on for 24 hours and its temperature has varied by no more than + 1 °C.

Setting the Shaker Speed

Your unit is equipped with a shaker mechanism that provides maximum oxygenation of your samples.

You control the shaking mechanism using the shaker control—which consists of a digital display that shows RPM (rotations per minute) in increments of 1 and UP/DOWN arrow pads marked *Set RPM*—and the *RPM* switch.

To turn the shaking mechanism on

1. Be sure the door is completely closed.
2. Push the *RPM* switch to the On (I) position.

   The shaker mechanism will increase the speed up to the current set point, which is the speed at which the unit will rotate per minute. Note that the shaker motor runs continuously as long the RPM switch is On (I).

To adjust the shaker speed (RPM)

1. Press either the Up or Down arrow key once. The display starts to blink from bright to dim and shows the RPM set point.
2. Press the Up or Down arrow keys to select the desired RPM.

   The incubator accepts the new set point after you release the arrow pads for 5 seconds. At that time, the display stops blinking and indicates the present RPM.

   Even if you turn the RPM switch off (O), the controller remembers the last RPM value used.

   You can adjust the movement of the shaking mechanism. See page 13.

Using the Timer

Using the incubator's timer, you can run the shaker platform at a preset RPM for a preset time. The timer can be set at intervals of one (1) minute up to a maximum of a 999 (16 hours 39 minutes).

Upon completion of the timing cycle, the TIMER alarm LIGHT will turn ON and an alarm will sound.

You can interrupt the timer if you need to access the shaking platform before the timer completes.

To start a timed shaking process

1. Turn the TIMER switch to the ON (I) position.
2. Press the set timer up or down arrow key once. The display starts to blink off and on and shows the current set time. Press the up or down arrow to select the desired time.

Approximately five seconds after you release the Up or Down arrow keys, the display stops flashing and the timing interval begins.

To interrupt a timed shaking process

- Turn the TIMER switch and the RPM switch to the OFF (O) position.

CAUTION

Wait for the mechanism to come to a complete stop before entering the chamber.

To restart an interrupted timed shaking process

- Turn the RPM and TIMER switch to the ON (I) position.

Setting the Safety Temperature Alarm

You can prevent the chamber temperature from inadvertent over-heating by using the unit's Over-Temperature Protection (OTP), which consists of:

- a thermostat independent of the main temperature control.
- a knob, marked *Safety Temp*, to set the safety temperature threshold. The numbered scale around the knob is for reference only and does not correspond to any temperature points.
- an alarm, marked *Temp*, that sounds if the temperature exceeds the user-defined temperature threshold.

To set the safety temperature thermostat

1. For best results, calibrate your unit before you set the safety thermostat.

See "Calibrating the Main Temperature Control" on page 11.

2. Be sure the temperature within the chamber has stabilized at the set point for several hours.
3. Using a screw driver or a small coin, turn the *Safety Temp* knob counterclockwise until the *Temp* alarm light turns on and off, which designates that your OTP has been activated. The light will cycle on and off as the element is trying to energize on and off.
4. Turn the *Safety Temp* knob slightly clockwise until the *Temp* alarm light turns off.

   NOTE: Temp Alarm will only sound off when temp overshoot 1°C from setpoint.

The OTP is now set at approximately 1°C above the main temperature set point. If, for any reason, the chamber temperature rises to the safety thermostat setting, the *Temp* alarm will go off and the heating element will not raise the chamber temperature any further.

Adding or Removing Counterweights

To allow the smoothest operation of the shaker, you should adjust the number of counterweights used based on the weight of the load.

To add or remove counterweights

1. Unplug the unit from its power source. When the shaker mechanism comes to a complete halt, remove the sample tray.
2. Rotate the counterweight platform until the counterweight appears. Remove the wing nuts and add or remove counterweights according to the total weight of your samples, as shown below.

Total Sample Weight	Number of Counterweights
Up to 2.3 kg (5 lbs.)	2
Up to 4.5 kg (10 lbs.)	3
Up to 6.8 kg (15 lbs.)	4
Up to 9 kg (20 lbs.)	5
Up to 11.3 kg (25 lbs.)	6

3. Replace the wingnuts and sample tray.

Adjusting the Shaker Movement

You can adjust the shaker movement to gentle, moderate, or vigorous shaking. Which shaking movement you use depends on the oxygenation needs and cell strength of your samples.

When you change the stroke of the shaker mechanism, you also need to adjust the counterbalance position.

WARNING

Always disconnect the unit from its power supply before attempting this procedure. Serious injury can result if the drive plate operates accidentally.

To adjust the shaker movement

1. Unplug the unit from its power source. Remove the sample tray.
2. Rotate the counterweight platform until the stoke adjuster is in full view. Remove the wing nut and adjust the arm to any of the available options.
3. Re-add the wing nut.
4. Rotate the counterweight platform until the counterweights are in full view. Remove the wingnuts and adjust the counterweights according to the diagrams shown below.
5. Replace the counterweight wingnuts.

The following diagrams show the various positions of the shaker mechanism and counterweights. The dimensions shown are the total stroke of the oscillator.

For example, ½ designates a pattern that is + ¼ inch from center. The indicated parts on the mechanism are:

1. Drive plate
2. Counterweight
3. Pivot nut: Do not adjust.
4. Stroke adjuster
5. Counterweight studs: secure using wingnuts.
6. Stroke adjuster bolt: secure using wingnut.

Oscillation Plate Overview ½" (1.3 cm) stroke setup -- light shaking ¾" (1.9 cm) stroke setup -- moderate shaking 1" (2.5 cm) stroke setup -- vigorous shaking

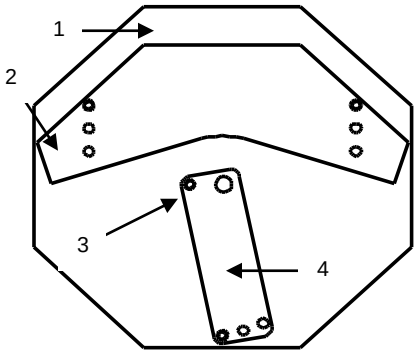

Oscillation Plate Overview

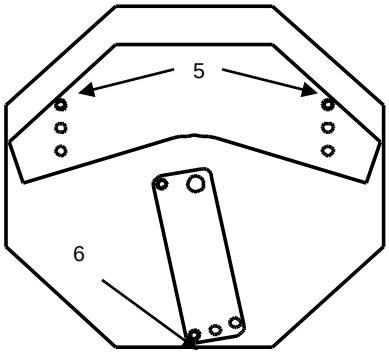

½" (1.3 cm) Stroke Setup – Light Shaking
(left-hand counterweight stud)

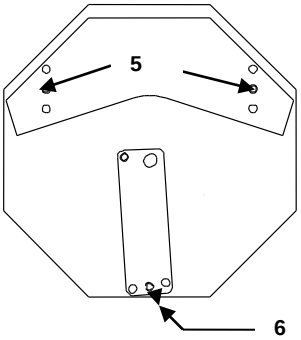

¾" (1.9 cm) Stroke Setup – Moderate Shaking
(middle counterweight stud)

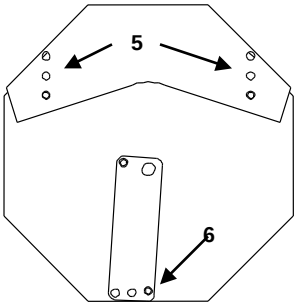

1" 2/5 cm) Stroke Setup – Vigorous Shaking
(right-hand counterweight stud)

Interior Accessory Outlet

This unit features an accessory outlet to provide power for equipment such as magnetic stirrers, rockers, etc. The weight of this equipment should not exceed 22 pounds (10 kg) per shelf. This equipment may provide additional heat that could affect the temperature range of this incubator. We recommend testing the incubator and any accessory equipment to ensure that the desired operating conditions can be met.

Caution: This incubator operates at conditions that might damage accessory equipment. Verify that your accessory equipment is capable of operating under the same conditions as the incubator.

The outlet is located inside the incubator in the upper right rear of the chamber. The voltage available at the accessory outlet is the SAME as the voltage supplied to the incubator. For example, a 120-vac incubator will have 120 vac at the accessory outlet, and a 240-vac incubator will have 240 vac at the accessory outlet. DO NOT exceed 500 va rating of the accessory outlet.

Maintaining the Unit

The only regular maintenance required for your unit is to keep it clean and free from contamination. Use the guidelines and instructions in this section to maximize the life of your incubator and help prevent contamination of your samples.

WARNING

Do NOT Use Flammable Cleaning Detergents.

Do NOT store Flammable materials In, On or Near this equipment.

Disinfecting Your Unit

Although your operating conditions and related protocol should determine the actual decontamination procedures you use, always keep the following guidelines in mind when decontaminating your unit:

- **Use cleaning materials known to be compatible with your unit. If any questions arise about compatibility issues, contact Customer Service, see page-21.**
- Clean and disinfect the incubator interior on a regular basis. If the inside of your incubator smells strangely or contains rust, mold, or dirt, you need to clean your incubator more frequently
- Dust the outside walls of the incubator at least every two months.
- For incubators placed on the floor, move the incubator every two months to clean and disinfect the floor below.
- Clean all gaskets and hinges every month.
- **Do not use chlorine-based bleaches or cleaners** with abrasives as they will corrode and pit the interior of you incubator and any other stainless steel surfaces. Use only non-abrasive cleaners.
- Do not use spray cleaners that might leak through openings and cracks and get on electrical parts. These cleaners may also contain solvents that will harm the coatings.
- Do not use hard tools such as metal wire brushes or steel wool. Use only soft tools such as plastic brushes.
- Do not depend on the use of antibiotics to maintain completely sterile conditions, as this is an inadequate technique for sterilization. Instead, use the aseptic techniques described in this section to maintain sterile conditions in the incubator.
- You can use an autoclave to decontaminate stainless steel parts by following the manufacturer's instructions.

  Otherwise, wash all parts and surfaces with soap and water to remove any organic material. Disinfect the parts with a 70% alcohol solution. Rinse with distilled water and wipe dry with a soft cloth.

A Typical Decontamination Procedure

Following is decontamination procedure that will suit most situations.

WARNING

Regardless of which decontamination procedure you follow, always turn the unit off and disconnect the service cord from its power supply.

Before you reattach the unit to its power supply, be sure all cleaners are evaporated and dry.

To decontaminate the unit

1. Unplug the unit from its power source.
2. Remove all interior parts, including shelves and shelf clips.
3. Remove all gaskets and hinges. Clean and disinfect all mounting grooves for the door gaskets.
4. Clean and disinfect all rubber or plastic tubing, as well as the fan and fan housing.
5. Clean and disinfect all access ports, shaft holes, electrical pass-throughs and any other passages into the chamber.
6. Wash and disinfect all interior surfaces.
7. Let the chamber dry out fully before replacing the removed parts or reattaching the unit to a power supply.

Control Maintenance

The main temperature controller, over-temperature protection thermostat and main temperature probe do not require any maintenance. If the unit appears to be having trouble maintaining a temperature, see "Troubleshooting" on page 15.

Troubleshooting

Solving Problems

Should the proper function of your unit come into question, use this section to help you determine what the problem is and how to fix it.

Check if your question is similar to those listed below. Then follow the guidelines found in that section:

- The temperature control inside the unit does not appear to be working correctly. What's wrong?
- The refrigeration of my SSI5R (SI6R) does not appear to be working correctly. What's wrong?

WARNING

Replacing fuses with wrong type and value can result in serious damage to the equipment and property. ONLY Replace fuses with the same type and amperage indicated on the replacement fuse labels.

There are no user serviceable components inside the unit. Potentially lethal voltages exist. Do not attempt to service your unit beyond the procedures described here. See "Getting Your Unit Serviced on page-21"

Temperature

The temperature inside the unit is difficult to control. What's wrong?

What is the problem?	Possible Causes	To solve the problem...
The temperature indicated by the Main Temperature Control is higher than my reference thermometer.	• Controller is calibrated too high.	1. Calibrate the Main Temperature Controller. See page 11. 2. Call customer service. See page 21.
Display reads "HI" or "400+".	• Probe is unplugged *- Or -* • Wire to the probe is broken. *- Or -* • Probe is plugged in backwards.	1. Be sure the temperature probe is properly plugged in. *If this doesn't solve the problem...* 2. Call customer service. See page 21
Chamber temperature spikes over the set point.	• Unit is not calibrated properly.	1. Calibrate the Main Temperature Controller. See page 11.
The temperature indicated by the Main Temperature Control is lower than my reference thermometer.	• The temperature inside the unit has not yet stabilized after the door has been opened. *- Or -* • The temperature inside the unit has not yet stabilized after the unit has been turned off or a power failure. *- Or -* • Controller is calibrated too low. *- Or -*	1. Wait for the temperature indicated by the Main Temperature Controller to stabilize. If you have just turned the unit on, wait 24 hours for the incubator to stabilize at a warmer temperature. A fluctuation of no more than + 0.1 °C is normal. *If this is not the problem...* 2. Recalibrate the Main Temperature Controller. See page 11.

What is the problem?	Possible Causes	To solve the problem...
	• Over Temperature Protection (OTP) is set too low. *- Or -* • Heating element failure.	*If this doesn't solve the problem...* 3. Be sure your reference thermometer is certified. *If this is not the problem...* 4. Turn the OTP fully clockwise. *If this doesn't solve the problem...* Call customer service. See page 21
The Main Temperature Control displays "LO".	• Probe has shorted out.	Call customer service. See page 21
The unit will not heat up to set point.	• The amperage and voltage of the unit's power source do not match the unit's requirements. *- Or -* • Over Temperature Protection (OTP) is set too low.	1. Make sure the power source matches the data plate. (ie. voltage, hz, etc.) *If this does not solve the problem...* 2. Turn the OTP clockwise until the heating light or safety light turns on.
The unit will not heat at all.	• The OTP is not set high enough. *- Or -* • Temperature Controller failure. *- Or -* • Element failure.	1. For diagnostics purposes, turn the OTP fully clockwise. See OTP section. Call customer service. See page 21
The indicated temperature inside the chamber is fluctuating more than + 0.1 °C.	• The unit has not had time to stabilize to ambient conditions. *- Or -* • Temperature sensor not positioned properly. *- Or -* • The temperature sensor is faulty. *- Or -* • Electrical noise	1. If you have just turned the unit on, wait 24 hours for the incubator to stabilize at a warmer temperature. *If this is not the problem...* 2. If you have just opened the unit's door, wait for the temperature to stabilize. *If this is not the problem...* 3. Stabilize ambient conditions. *If this is not the problem...* 4. Call customer service. See page 21
Cannot adjust set points or calibration.	• This is a controller failure.	1. Turn entire unit off and then on to reset the unit. This may temporarily solve the problem, but controller may be faulty. *If this does not solve the problem...* 2. Call customer service. See page 21

What is the problem?	Possible Causes	To solve the problem...
Refrigeration (SSI5R models only) (SI6R)		
The unit will not cool.	• The evaperator has too much ice built up on it. *- Or -* • The unit is not calibrated correctly. *- Or -* • There is not enough space between the unit and adjacent walls or partitions. *- Or -* • The door seal does not work properly.	1. For diagnostics purposes, turn the OTP fully clockwise. See OTP section. *If this does not solve the problem...* 2. Recalibrate the Main Temperature Controller. See “ “ on page . *If this does not solve the problem...* 3. Be sure there is 5 cm (2 in.) of space between the rear and sides of the unit, and any walls or partitions that can obstruct free airflow.
Ice built up in the chamber.	• The door gasket leaks. • The door is opened too often. • There’s an open container letting moisture collect inside the chamber.	1. Check door seal. 2. Try to limit door opening/closing. 3. Seal the container.
Power		
The unit will not turn on.	• Power cord not firmly plugged into the outlet. *- Or -* • The unit or wall fuse/circuit breaker has blown. *- Or -* • The outlet is defective. *- Or -* • The unit is plugged into a circuit that already has too many electrical loads.	1. Be sure the voltage and frequency specifications of the outlet are within the range stated on the power rating overlay at the rear of the unit. *If this does not solve the problem...* 2. Check the power cord at the electrical outlet for proper fit. 3. Make sure the unit is plugged in firmly. *If this does not solve the problem...* 4. Replace fuse/circuit breaker in the unit or wall as necessary. *If this does not solve the problem...* 5. Make sure the outlet is in proper working condition. 6. Replace if defective. *If this does not solve the problem...* 7. Check to see what other loads are on the same circuit as the unit. We recommend that you plug your incubator into a circuit separate from other equipment. 8. Call customer service. See page 21
The unit fuse/circuit breaker blows often.	• Wrong fuse installed. • Wire is shorting out.	1. Check fuse for right amperage. 2. Call customer service. See page 21

What is the problem?	Possible Causes	To solve the problem...
The wall fuse/circuit break blows often.	• Too many things may be plugged in.	1. Check to see what other loads are on the same circuit as the unit. We recommend that you plug your incubator into a circuit separate from other equipment.
The front panel displays fail to turn on but the rest of the unit receives power.	• Controller failure	1. Call customer service. See page 21
The Main Temperature Controller is locked up.	• Controller failure	1. Turn entire unit off and then on to reset the unit. This may correct the problem, but the controller may still be faulty. 2. Call customer service.
Mechanical		
The door is not sealing.	• The door gasket does not function properly. *- Or -* • The door latch bolts are not tightened enough. *- Or -* • The hinges are not adjusted properly. *- Or -* • The door has been twisted. *- Or -* • The unit has been damaged and the body is not square.	1. Check the gasket visually. Make sure it's secure and smooth and free from rolls or tears, which would interfere with the magnetic seal. *If this does not solve the problem...* 2. Tighten the door latch bolts with a screwdriver. *If this does not solve the problem...* 3. To tighten hinges, use wrench to adjust and to check if the bolts are tight. *If this does not solve the problem...* 4. Call customer service. See page 21
The shaker motor squeals continuously with a constant pitch. Changes in intensity only when rpm varies. Stops when the oscillate switch is turned off. Sound appears to be coming directly from the motor, not the mechanism.	• Motor cable plugs not seated properly. *- Or -* • May have motor bearing failure..	1. May need to replace motor. Perform a visual inspection on motor to decide. *If this does not solve the problem...* 2. Call customer service. See page 21
Contamination		
The chamber is contaminated.	• Your unit is not cleaned and decontaminated often enough. *- Or -* • If your unit becomes contaminated even after you follow an appropriate maintenance regimen, the source of the contamination is probably not the incubator.	1. See "Maintaining the Unit" on page 14 for recommendations and instructions on decontaminating your unit. *If this does not solve the problem...* 2. There are many sources of contamination, such as water baths, hoods, autoclaves, reagents, disposables, incubators and personnel. If your unit becomes contaminated even after you follow an appropriate maintenance regimen, the source of the contamination is probably not the incubator. 3. Call customer service.

Getting Your Unit Serviced

Getting Assistance

Your incubator will provide years of trouble-free operation. Should you require assistance, however, SHEL LAB's customer service and support is available to assist you.

If your unit is still covered under warranty, repair or replacement will be made at no cost to you according to the warranty given at the back of this manual. If the warranty for your unit has expired, you can still return the unit for repair. If the unit proves to be beyond repair, we will promptly inform you of its condition and, if you want, return the unit to you.

Obtaining Nameplate Information

Before you contact customer service, obtain the following information about your unit from the data plate at the back of the unit. Use the spaces below to record the information.

- _____
Model Number

- _____
Serial Number

Returning Your Unit

If you need to return your unit for any reason, first contact your customer representative for return authorization number (RA#). Be sure to print the RA# clearly on the package in which you ship your unit.

No return is accepted without:

- prior authorization by SHEL LABS
- a clearly visible RA# on the package.

SHEL LAB Contact Information

Please allow at least 24 hours from the time that you contact our service manager for service to be scheduled.

Contact Information

Sheldon Manufacturing Inc.
P.O. Box 627
Cornelius, Oregon 97113
Phone: (503) 640-3000
Toll free: 1-800-322-4897
Fax: (503) 640-1366

Email:**tech@Shellab.com**
Internet:http://www.Shellab.com/~Shellab

Replacement Parts and Accessories

Replacement Parts

Part	115V	220V
Adjustable feet	2700500	2700500
Alarm Display Vertical	1750681	1750681
Counterweight, Single	5460662	5460662
Door Gasket	3450562	3450562
Drive Belt, Oscillator	0500512	0500512
Element Coil	9570703	9570738
Flask Clamps, 1 Liter	9530532	9530531
Flask Clamps, 125ml	9530530	9530530
Flask Clamps, 250ml	9530531	9530531
Flask Clamps, 500ml	9530526	9530526
Fluorescent Lamp	4650528	4650528
Fuse 120V	3300513	N/A
Fuse 230V	N/A	3300515
Fuse Holder	3300501	3300501
Knob, Safety Thermostat	4450506	4450506
Light Ballast	4660501	4660506
Light Cover	9510502	9510502
Light Cover Gasket	3450538	3450538
Light Holder	4660502	4660502

Part	115V	220V
Motor, Circulation	4880527	4880528
Outlet, Interior	4200518	6100531
Platform (Sample Tray)	9750758	9750758
Power Cord	1800510	1800500
Refrigeration Unit, SSI5R (SI6R)	7010521	7010543
Safety Thermostat	1750862	1750862
Shelf	5100531	5100531
Shelf Clips	1250512	1250512
Switch, Door	7850578	7850578
Switch, RPM, Timer Light	7850553	7850553
Switch, Power	4650554	4650554
Temp. Display Board	1750677	1750677
Timer Display Board	1750679	1750679
Transformer, Speed Control	8350508	8350508

Specifications

		SSI5 (SI6)	SSI5R (SI6R)
Temperature			
Unit Range		Ambient+ 8°C to 60 °C	10°C to 60°C
Uniformity		±0.8 °C at 37 °C	±0.8 °C at 37 °C
Stability		±0.1 °C	±0.1 °C
Alarms		Visual Safety Lamps	Visual Safety Lamps
Capacity			
Volume		156.0 m^3 (5.5 cu. ft.)	156.0 m^3 (5.5 cu. ft.)
Shelf Capacity		10.0 kg (22.0 lbs)	10.0 kg (22.0 lbs)
Total Shelf Load		20.0 kg (44.0 lbs)	20.0 kg (44.0 lbs)
Dimensions			
Interior (Width × Depth × Height)		482 x 521 x 571 mm (19.0 × 20.5 × 22.5 in.)	482 × 521 × 571 mm (19.0 × 20.5 × 22.5 in.)
Exterior (Width × Depth × Height)		724 x 750 x 1029 mm (28.5 × 29.5 × 40.5 in.)	724 × 750 × 1029 mm (28.5 × 29.5 × 40.5 in.)
Shaking Mechanism			
Motor		Brushless DC	Brushless DC
Speed, Sample		30 to 400rpm, ±4 rpm (1 rpm increments)	30 to 400rpm, ±4 rpm (1 rpm increments)
Controller		Microprocessor/Digital LED	Microprocessor/Digital LED
Stroke Length		1.3, 1.9, 2.54 cm (0.5, 0.75, 1.0 in.)	1.3, 1.9, 2.54 cm (0.5, 0.75, 1.0 in.)
Orbit Diameter		12 mm, 19 mm or 25 mm	12 mm, 19 mm or 25 mm
Shaking Capacity (stroke-limited)		10 kg (22 lbs.)	10 kg (22 lbs.)
Door Switch		Yes	Yes
Platform Dimensions		44 × 44 x 1.9 cm (17.25 × 17.25 x .75 in.)	44 × 44 x 1.9 cm (17.25 × 17.25 x .75 in.)
Refrigeration			
Compressor Type		NA	1/6 HP
Refrigerant		NA	R-134A (6.5 oz.)
Electrical			
Watts / Amps	110 – 120V~	850 watts / 8.5A	1100 watts / 11.5A
Watts / Amps	208 – 240V~	850 watts / 5.5A	1100 watts / 6.5A
Cycle / Phase		50/60 Hz / Single Phase	50/60 Hz / Single Phase
Certifications		CE (220V only)	CE (220V only)
Weight			
Net Weight		90 kg (198 lbs.)	132.0 kg (291.0 lbs.)
Shipping Weight		114.0 kg (250.0 lbs.)	149.0 kg (328.0 lbs.)

Copyright © 2002 Sheldon Manufacturing. All rights reserved.
All specifications and features for this product are subject to change without notice.

WIRE DIAGRAMS
SSI5 (SI6) 110V
(9851457)

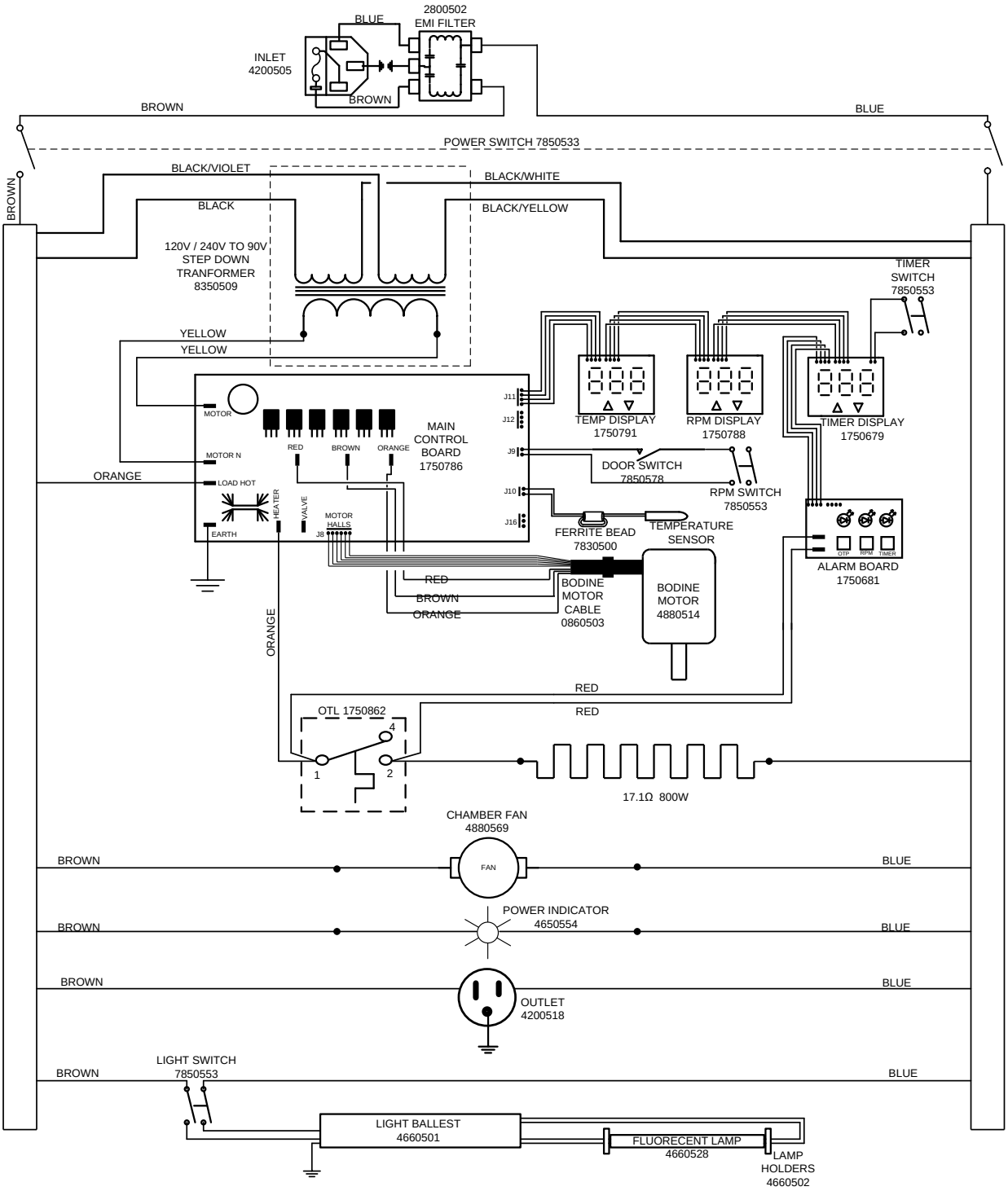

Copyright © 2002 Sheldon Manufacturing. All rights reserved.
All specifications and features for this product are subject to change without notice.

SSI5-2 (SI6-2) 220V

(9851458)

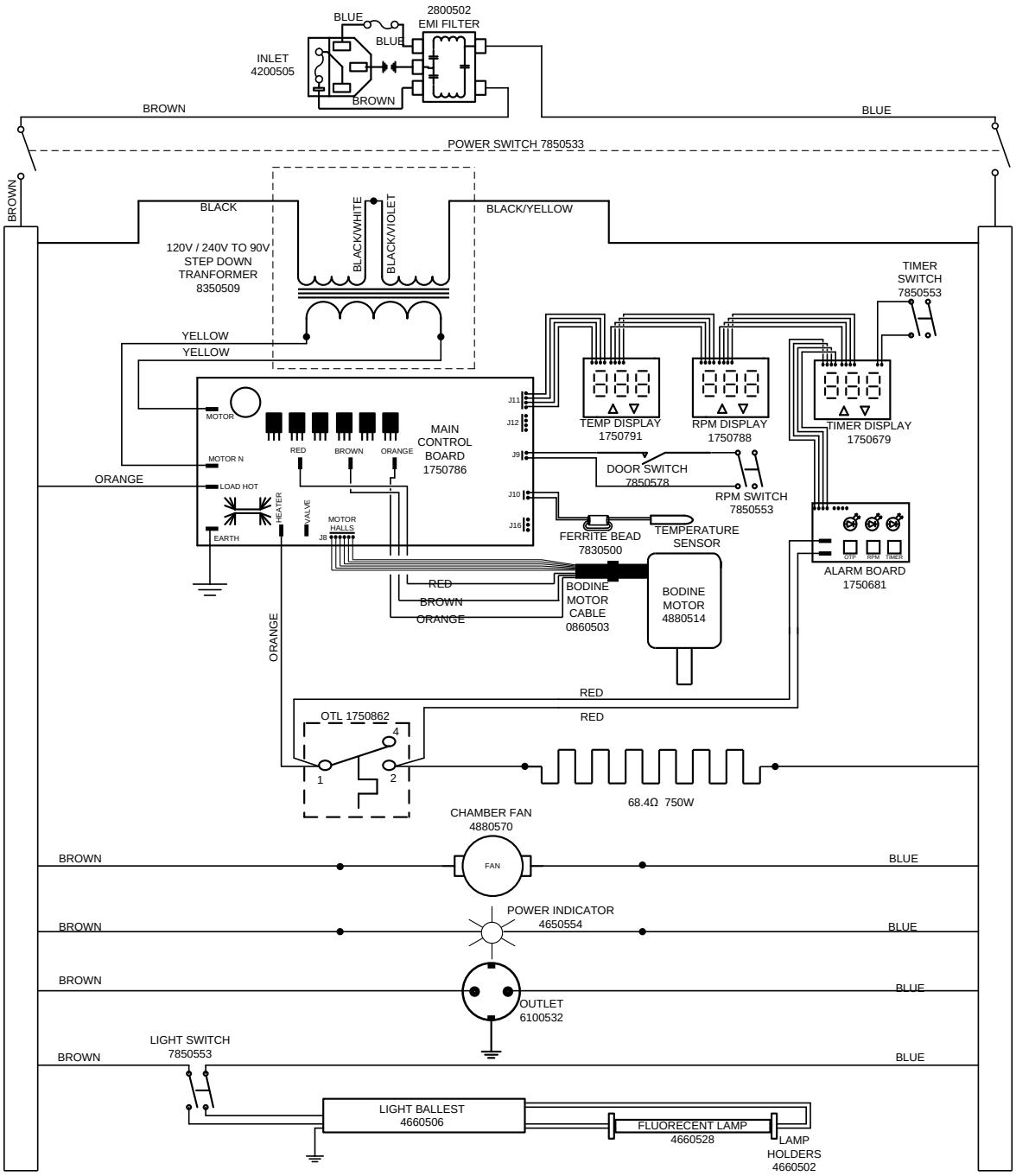

Copyright © 2002 Sheldon Manufacturing. All rights reserved.
All specifications and features for this product are subject to change without notice.

SSI5R (SI6R) 110V

(9851459)

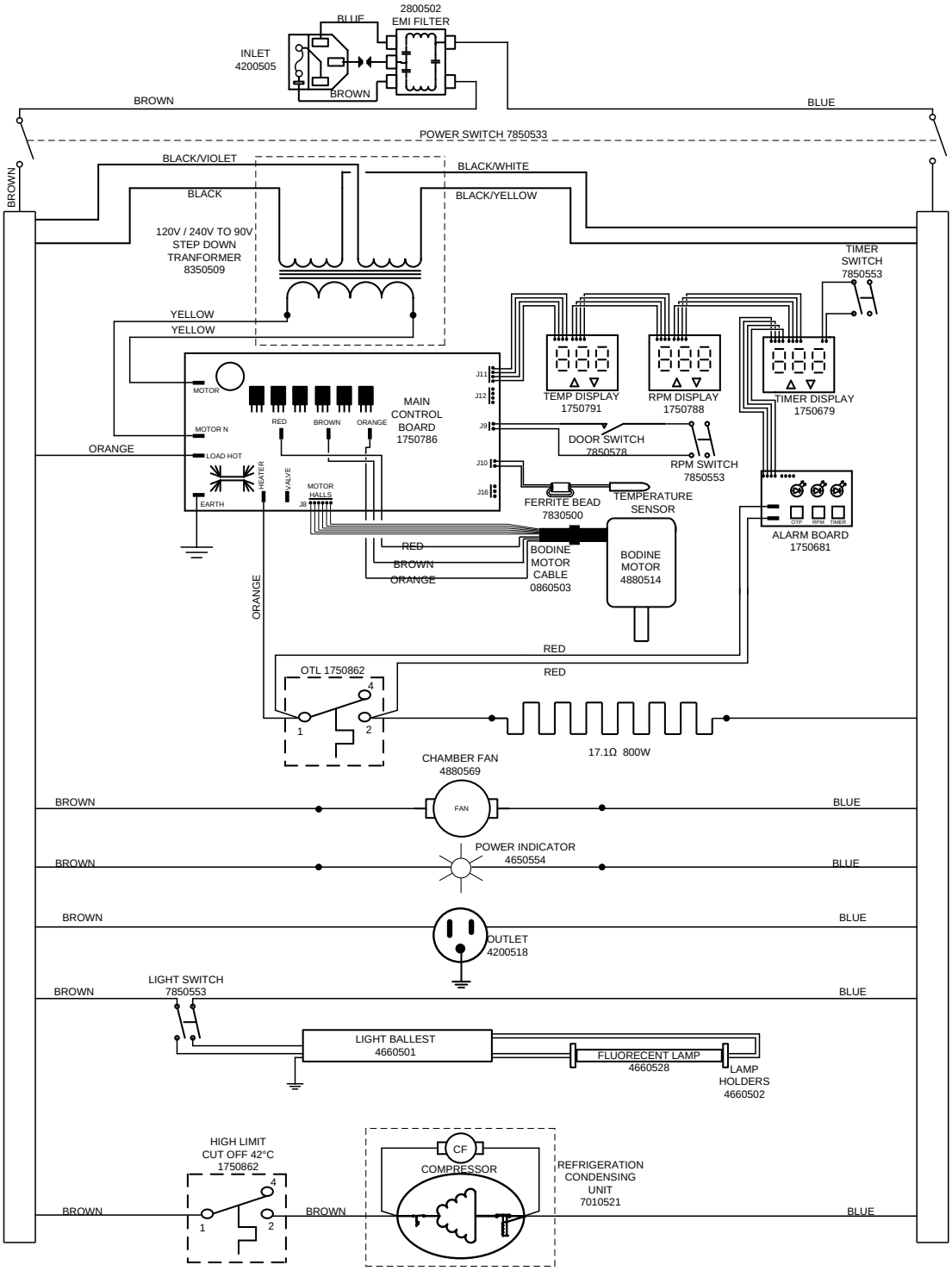

Copyright © 2002 Sheldon Manufacturing. All rights reserved.
All specifications and features for this product are subject to change without notice.

SSI5R-2 (SI6R-2) 220V

(9851460)

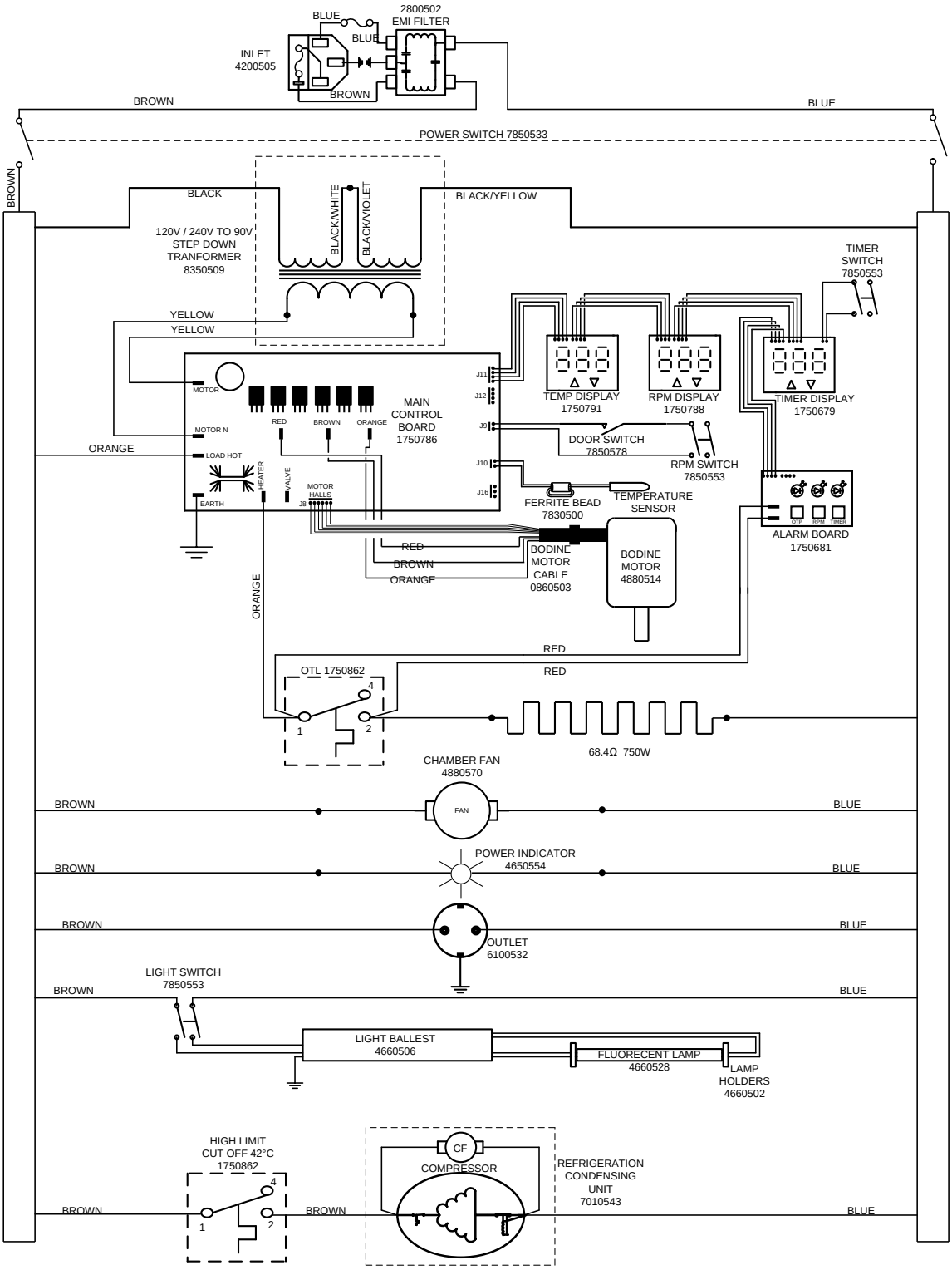

Copyright © 2002 Sheldon Manufacturing. All rights reserved.
All specifications and features for this product are subject to change without notice.